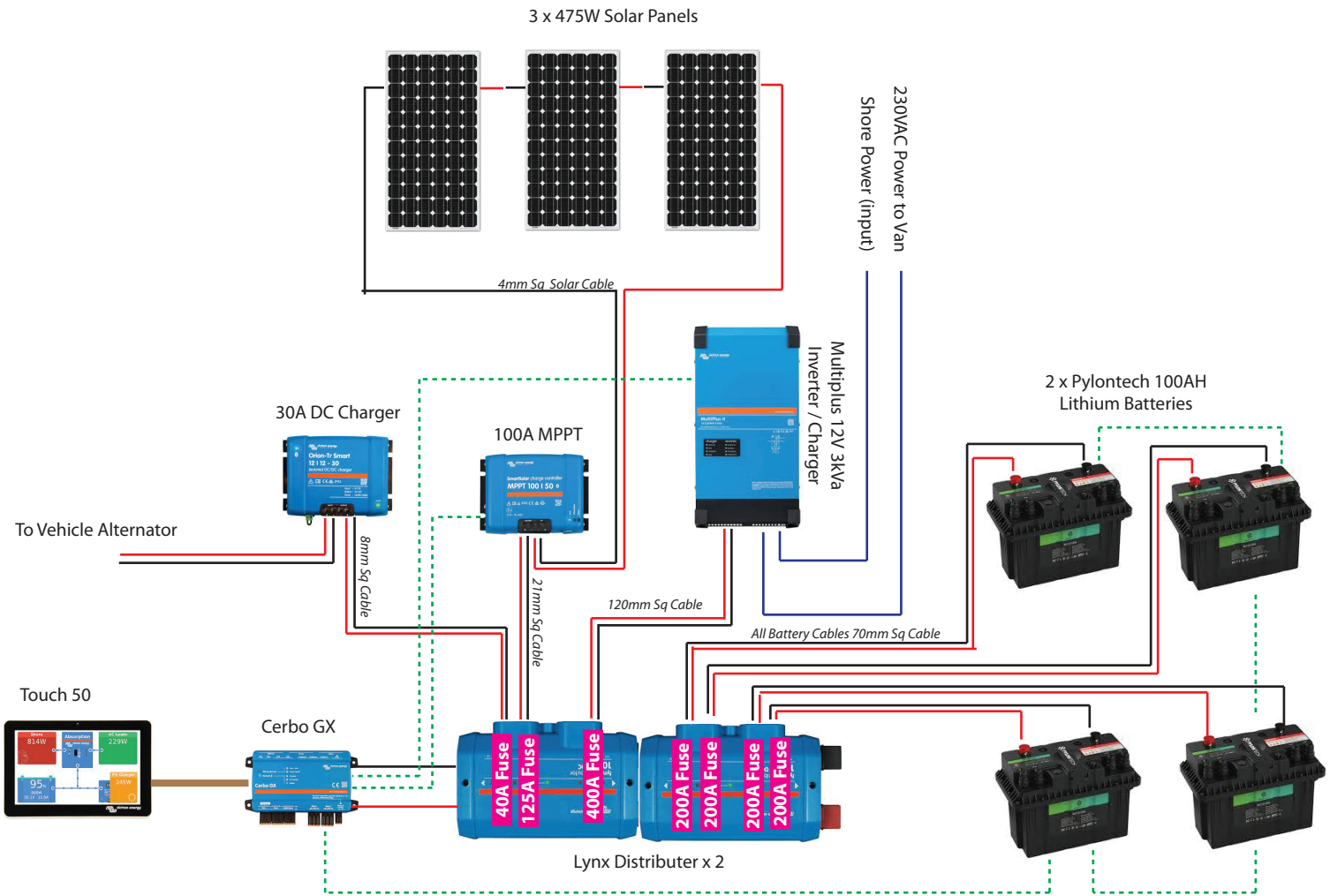
3 x 475W Solar Panels
230VAC Power to Van
Shore Power (input)
4mm Sq Solar Cable
Multiplus 12V 3kVa
Inverter / Charger
2 x Pylontech 100AH
Lithium Batteries
30A DC Charger
100A MPPT
To Vehicle Alternator
8mm Sq Cable
21mm Sq Cable
120mm Sq Cable
All Battery Cables 70mm Sq Cable
Touch 50
Cerbo GX
40A Fuse
125A Fuse
400A Fuse
200A Fuse
200A Fuse
200A Fuse
200A Fuse
Lynx Distributer x 2